FOORIR
Smart Counter Provider

# User's Manual

## 3D AI People Counter

HX-CCD23 ( Bus Property Version)

# Content

1. Product Structure ..... 3
1.1 Packing List ..... 3
1.2 Product Size ..... 4
1.3 Appearance and Function ..... 4
2. Installation Instructions ..... 5
2.1 Installation Notes ..... 5
2.2 Installation Height and Coverage ..... 5
2.3 Factors Affecting Accuracy ..... 6
3. Installation Steps ..... 6
3.1 Ceiling Installation ..... 6
4. Enter the Device Configuration Page ..... 7
4.1 Device Powered on ..... 7
4.2 Connect Devices Using Hotspot ..... 8
4.3 Connect the Device Using a Network Cable ..... 9
5. Device Configuration Page Operations ..... 11
5.1 Go to the Device Homepage and Select the "Settings" Option ..... 11
5.2 Set the Height Parameter ..... 11
5.3 Set Detection Area and Detection Line ..... 12
5.4 Network Settings (Optional) ..... 13
5.5 Data Reporting Settings (Optional) ..... 14
5.6 Equipment Upgrade (Optional) ..... 15
5.7 Map Collection (Optional) ..... 15
6. Common Faults and Handling Methods ..... 16
6.1 Device Cannot be Found in Wired Mode ..... 16
6.2 Notes ..... 16

# 1. Product Structure

## 1.1 Packing List

- **Product Pictures**

Front View

Back View

- **Accessories**

Waterproof Cap

Screw Pack

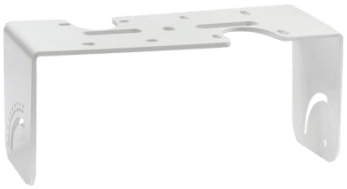

Bracket

Instructions

⚠ **If any of the above items are damaged or lost, please contact your supplier in time.**

## 1.2 Product Size

**Unit: mm**

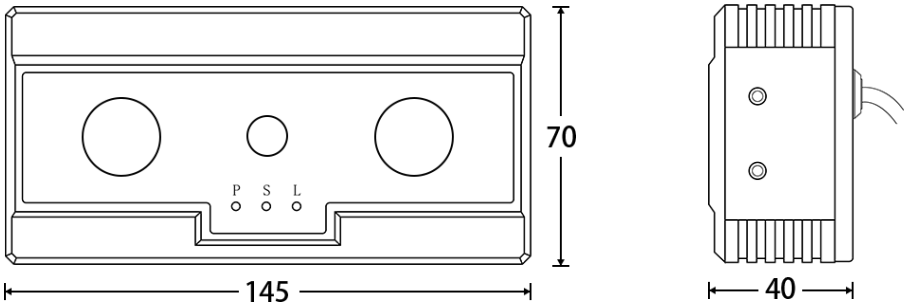


## 1.3 Appearance and Function

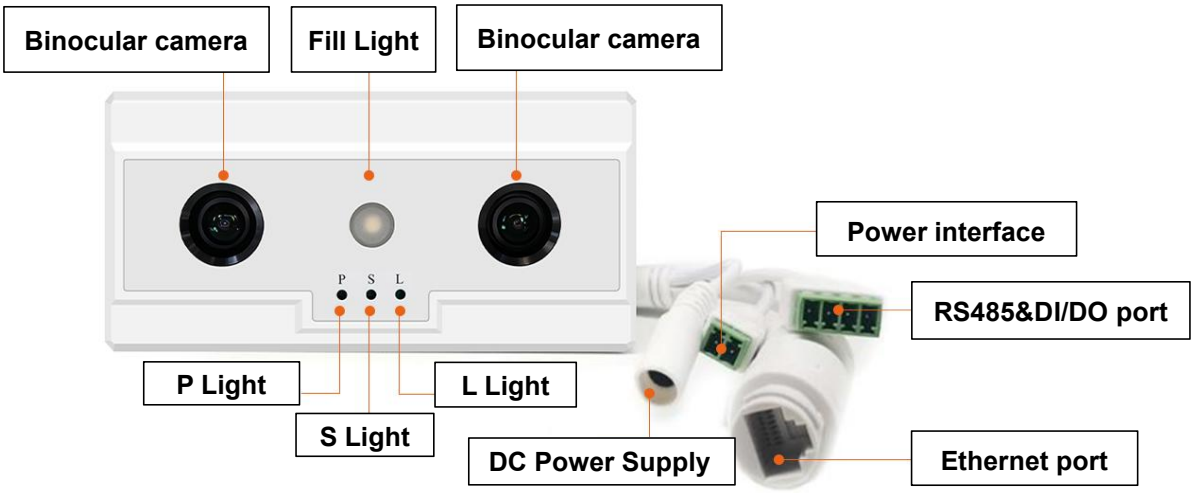


| Name | Description |
|---|---|
| **Power indicator light** | P light is always on |
| **Power on flashing** | PSL three lights flash once |
| **Network Status (Link light)** | ① Plug in Ethernet cable: L light is always on<br>② During data communication: L light flashes<br>③ When there is no Ethernet cable or communication, the L light will turn off |

| | |
|---|---|
| **System operating status** | ① The system is not running properly: The S light is not on (problems detected with the calibration file, etc.)<br>② The system is running normally and the connection to the server is normal: S light is always on<br>③ The system is running normally but not connected or communicating with the configured server: S light flashing |
| **RS485&DI/DO Port** | Port 1: 485A, Port 2: 485B,<br>Port 3&4： DI and DO interfaces<br>Attention: For port 1234, please refer to the numbers on the interface |
| **Ethernet interface** | RJ45 interface/PoE port |
| **Power interface** | 3.5mm-2Pin power interface (9-36V) |
| **DC power supply** | 5.5-2.1 Power interface (9-36V) |

# 2. Installation Instructions

## 2.1 Installation Notes

- Be careful not to get too close to the wall during installation. It is best to keep a distance of 50cm.
- There should be no wiring harnesses or objects near the device, which will interfere with device detection.
- The device needs to be installed horizontally and does not support tilted installation.

## 2.2 Installation Height

⚠ It is recommended to find an installation location at a suitable height based on the coverage area required.

⚠ The field of view is the visible range of the screen, not the actual detection range.

| Installation Height (m) | Coverage Width (m) |
|---|---|
| 1.7 | 1.1 |
| 2.1 | 2.2 |
| 2.5 | 4.4 |
| 2.7 | 5.49 |
| 3.0 | 7.0 |

## 2.3 Factors Affecting Accuracy

- No objects should be near the device, which may interfere with the device's detection.
- The detection line should only cover the ground, and should not be drawn on other higher objects.
- If there are other similar sensor devices nearby, there may be interference.

# 3. Installation Steps

Top-mounted Wall-mounted Embedded

## 3.1 Ceiling Installation

**Step 1:** Mark the installation position of the bracket with a marker, drill the installation holes with an electric drill, fix the expansion screw slots in the holes on the ceiling, and install the bracket firmly with the expansion screws.

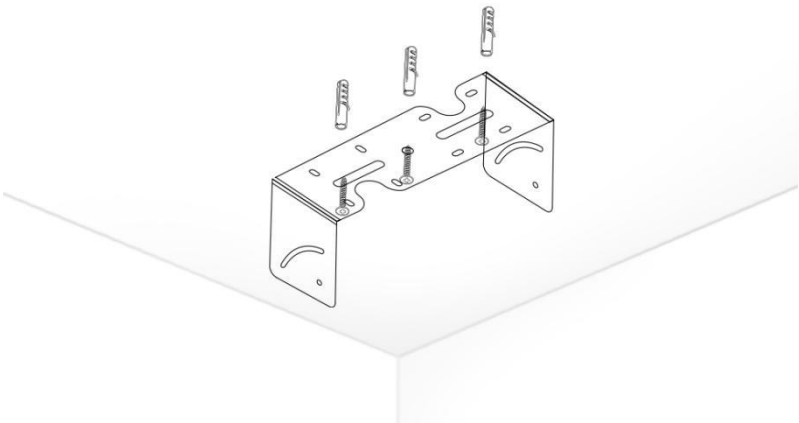

**Step 2:** Embed the device into the bracket, align the holes on the side of the bracket with the screw holes on the device, and fix it with the standard 304 cylindrical head hexagon screws.

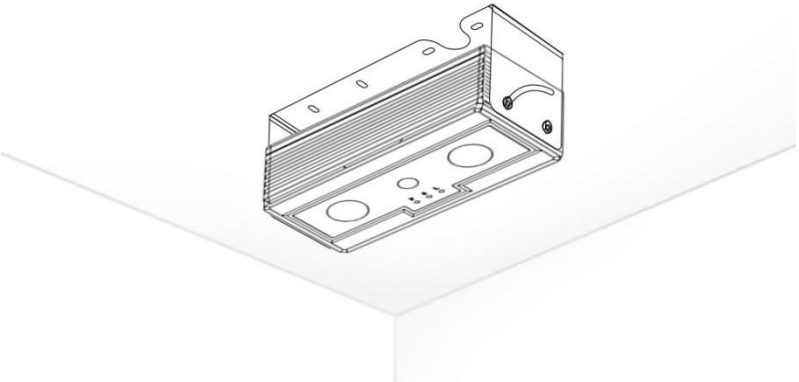

**Step 3:** Supply power to equipment and the grid.

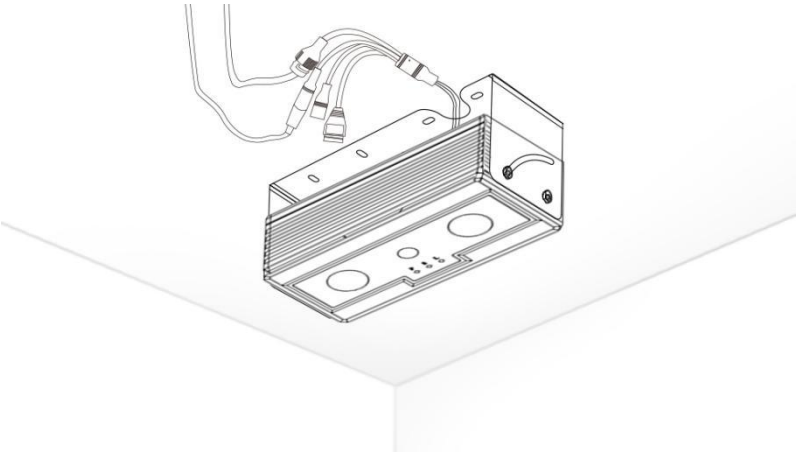

# 4. Device Connection and Startup

## 4.1 Device powered on

Binocular passenger flow statistics products currently have two power supply methods：

1. DC:9~36V Power supply

Plug the standard DC 12V power adapter into the 220V power supply and connect the 12V output harness terminals to the camera's 12V power supply port.

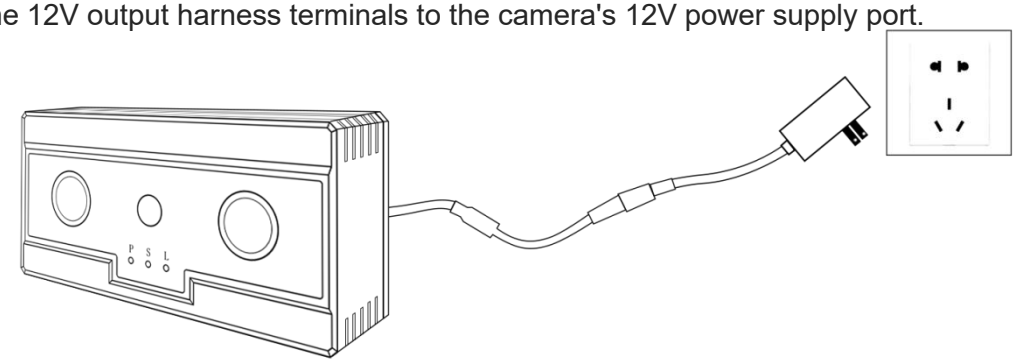

2. POE Power supply

If the POE switch connection conditions are available, the device can be directly connected to the POE switch, and the power supply and networking can be provided at the same time (no need to connect to DC power supply).

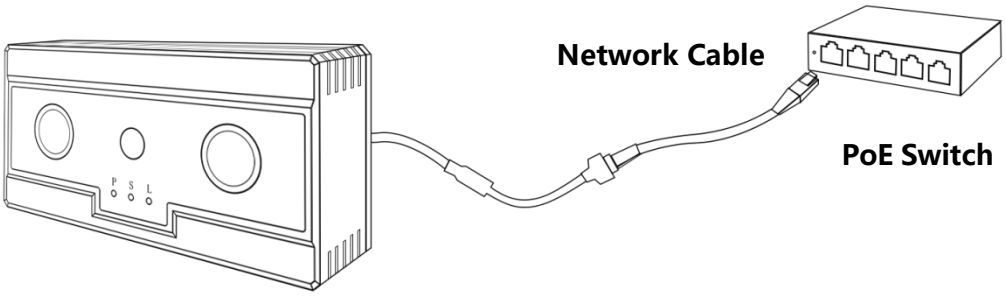


## 4.2 Connect Devices Using Hotspot

- Open the Wi-Fi list on your computer (or phone) and search for the device's hotspot: HF + the last 10 digits of the SN
- Hotspot password: hf123456

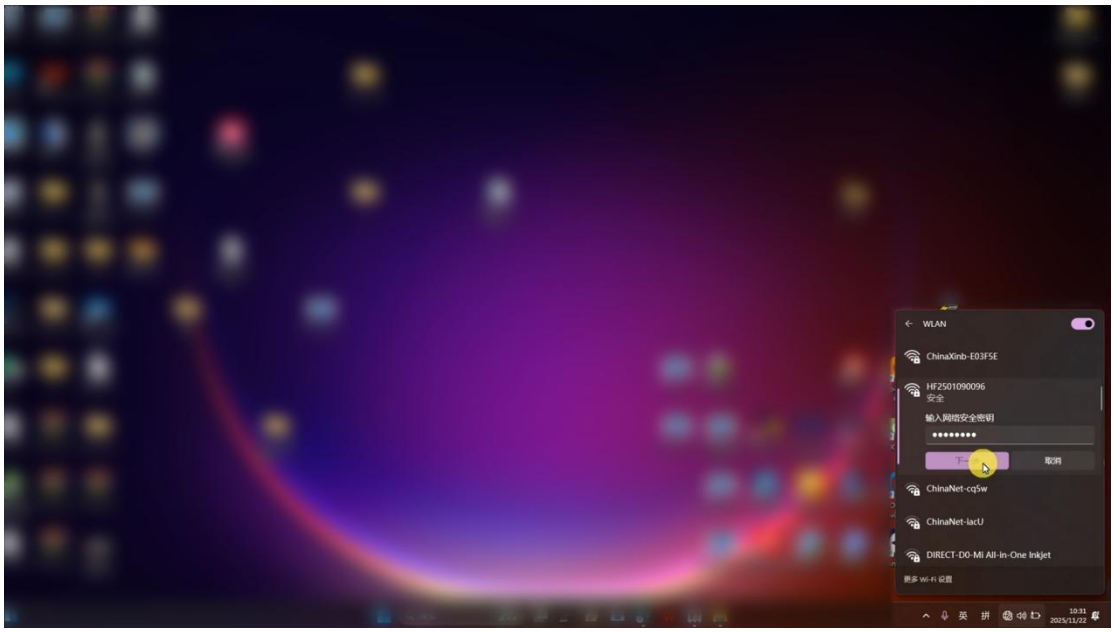

- Open any browser and enter the access address: 192.168.4.10
- Username: admin
- Password: hf123456

## 4.3 Connect the Device Using a Network Cable

1.Download the accompanying tool "foorir-search" from the official website www.foorir.cn's download section.

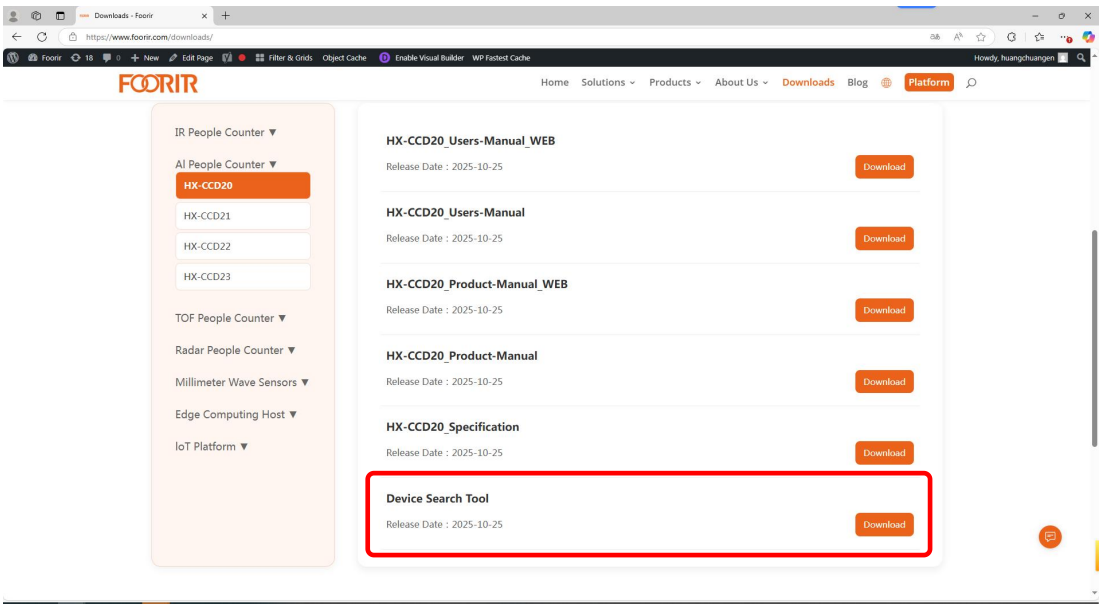

2. Open the supporting tool and scan for devices.

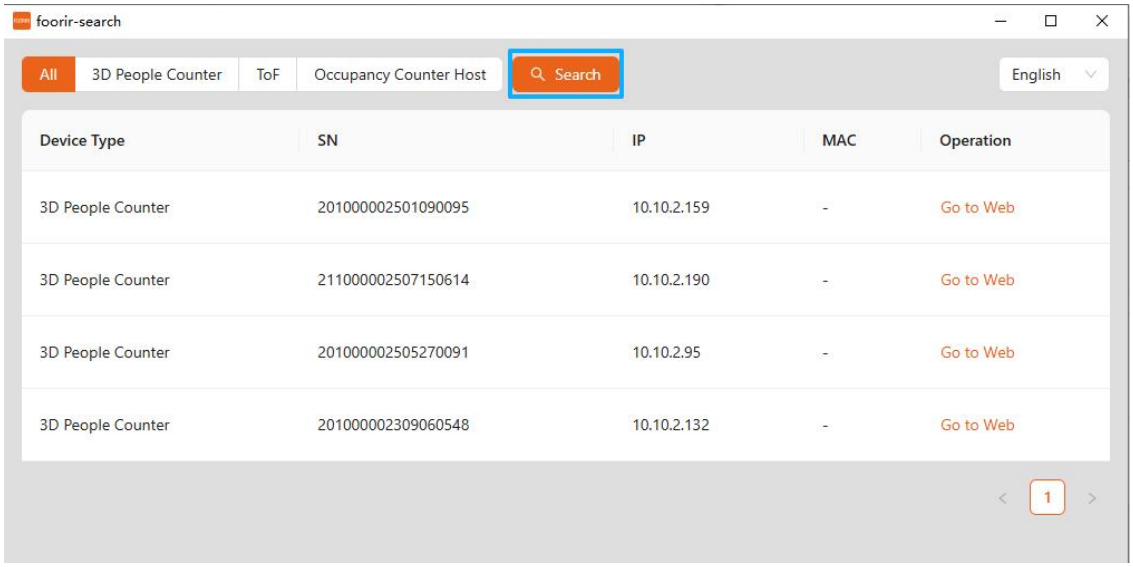


3. After searching for the device, enter the device configuration page.

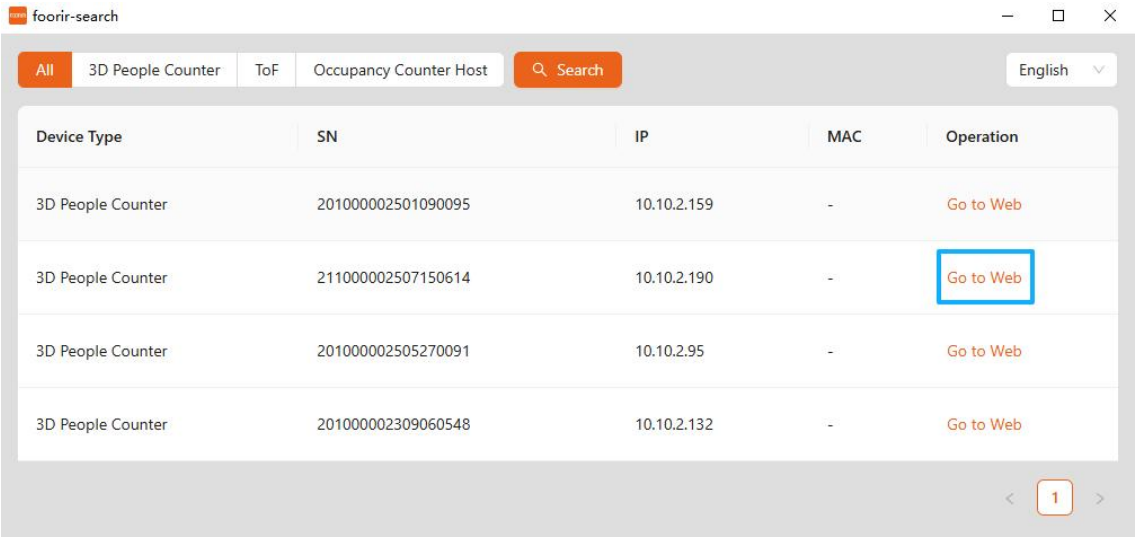

# 5. Device Configuration Page Operations

## 5.1 Go to the Device Homepage and Select the "Settings" Option

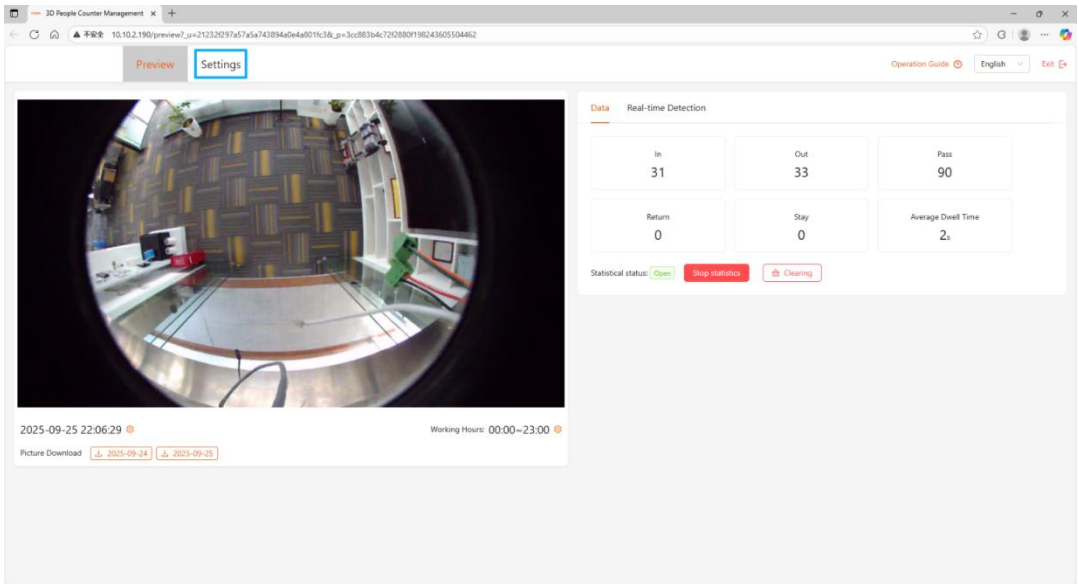


## 5.2 Set the Height Parameter

1. Settings are based on the actual installation; top mounting, side mounting, and angled mounting are available (top-mounted horizontal installation is recommended);

2. Before setting parameters, the counting must be stopped;

3. ⚠ **Installation Height:** The entered height must match the actual installation height (error less than ±5cm);
⚠ **Filter Height:** Objects below this height will not be detected. This effectively filters interference from objects. A height of 100-120cm is recommended;
⚠ **Installation Angle:** The optimal installation method is horizontal with a 0-degree angle. Inclined installation is not recommended;
⚠ **Child Mode:** When enabled, people below the child height but above the filter height will be counted as children. If the child height setting is equal to the filter height, it will be ineffective.

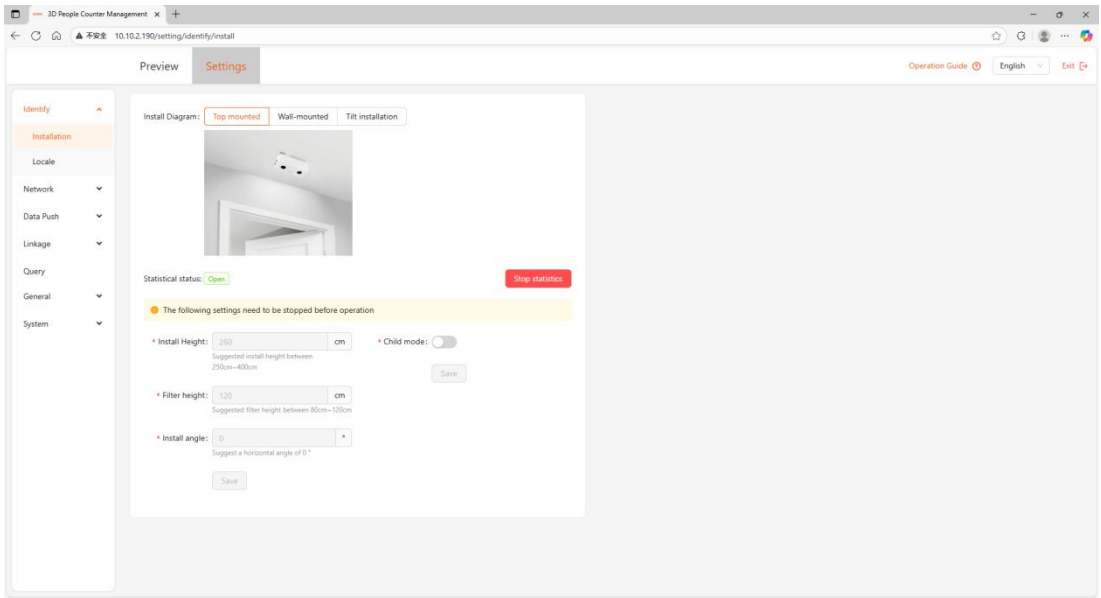


## 5.3 Set Detection Area and Detection Line

1. Before setting parameters, you need to stop counting;

2. Before setting, you can update the background image to ensure the lens is unobstructed;

3. ⚠ **Detection Area:** Blue represents the maximum detection range at the current height, and red represents the current actual detection range. The detection range cannot exceed the ground area and can be drawn according to the actual ground passage area;

⚠ **Detection Line:** The detection line should not be too close to one side of the detection area, and should be centered as much as possible. When setting, you need to ensure that each entry and exit passes through the middle detection line (if the sides of the detection line are missed, turn on the broken line mode below);

⚠ **Detection Direction:** The direction indicated by the arrow is the entrance direction.

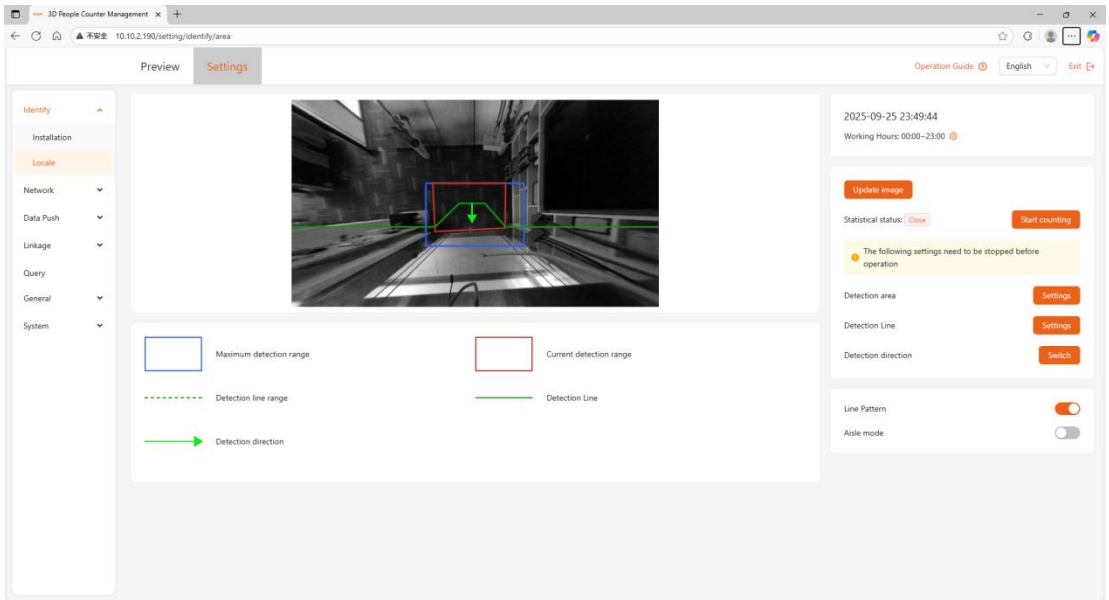


## 5.4 Network Settings (Optional)

1. It is not recommended to use wired and wireless networks simultaneously. Unless there are specific needs, it is advisable to use the default wired DHCP mode. If manually setting a static IP address, ensure that the IP address is correct and usable, and avoid IP conflicts with other devices.

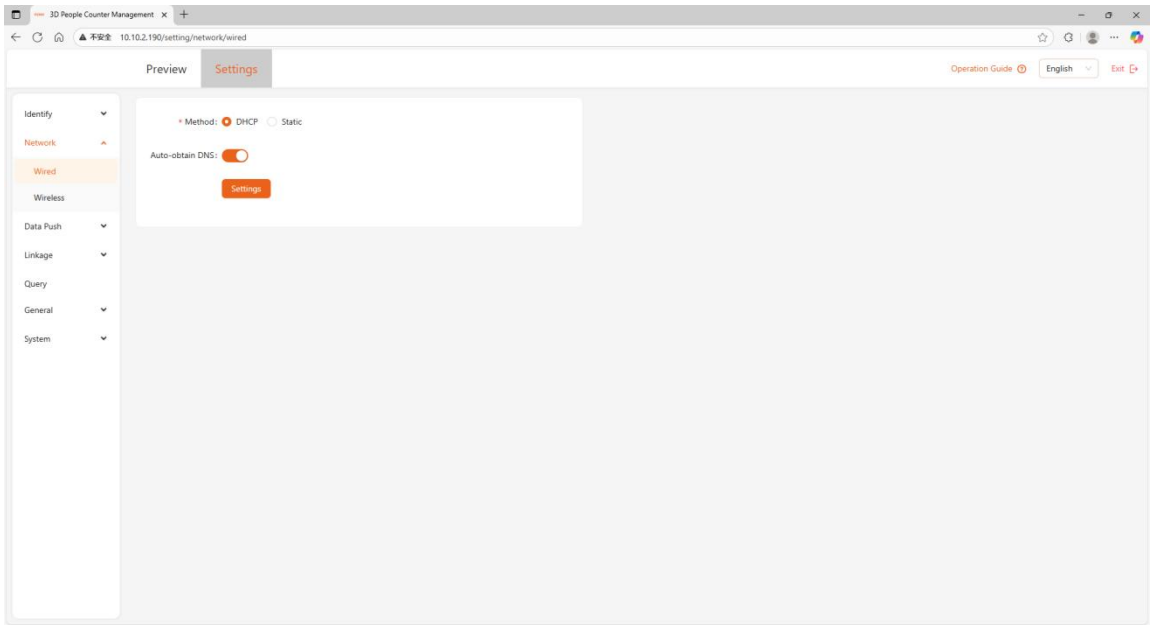


2. The wireless network device only supports 2.4GHz WiFi. It cannot connect to 5GHz or mixed-frequency WiFi.

3. After setting up the network, the device will restart, which takes approximately 1-2

minutes. Wait for the device to restart completely before refreshing the page.

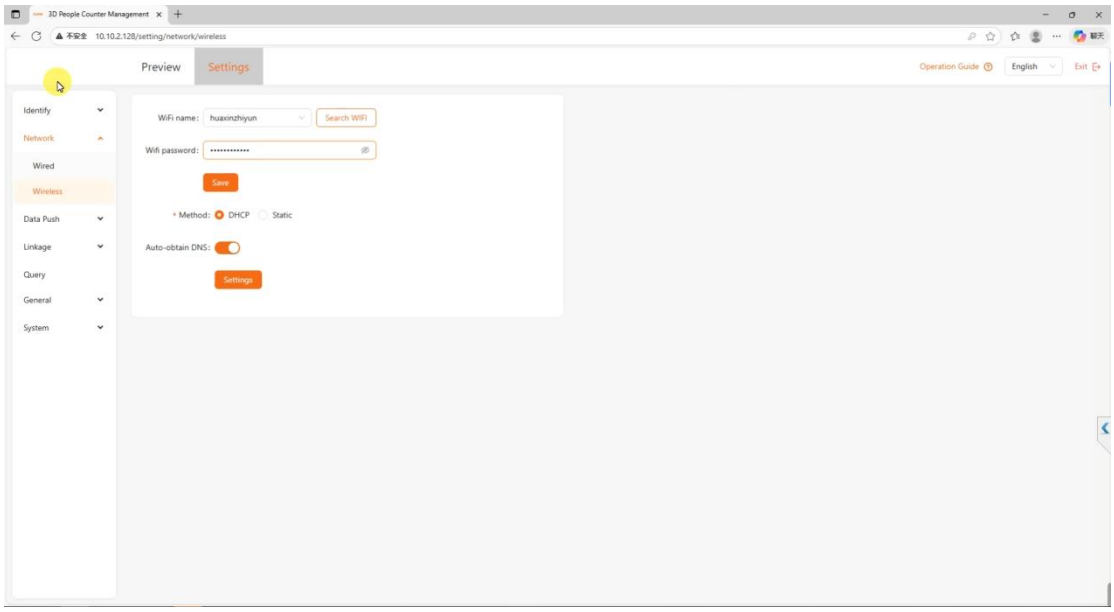


## 5.5 Data Reporting Settings (Optional)

The device supports data reporting via HTTP, FTP, and MQTT; HTTP reporting is recommended.

For example, using HTTP: only fill in the server address and port.

If using our cloud platform, simply set the server address: op.foorir.com; port: 8088.

For other settings, click on Interface Settings and Advanced Settings.

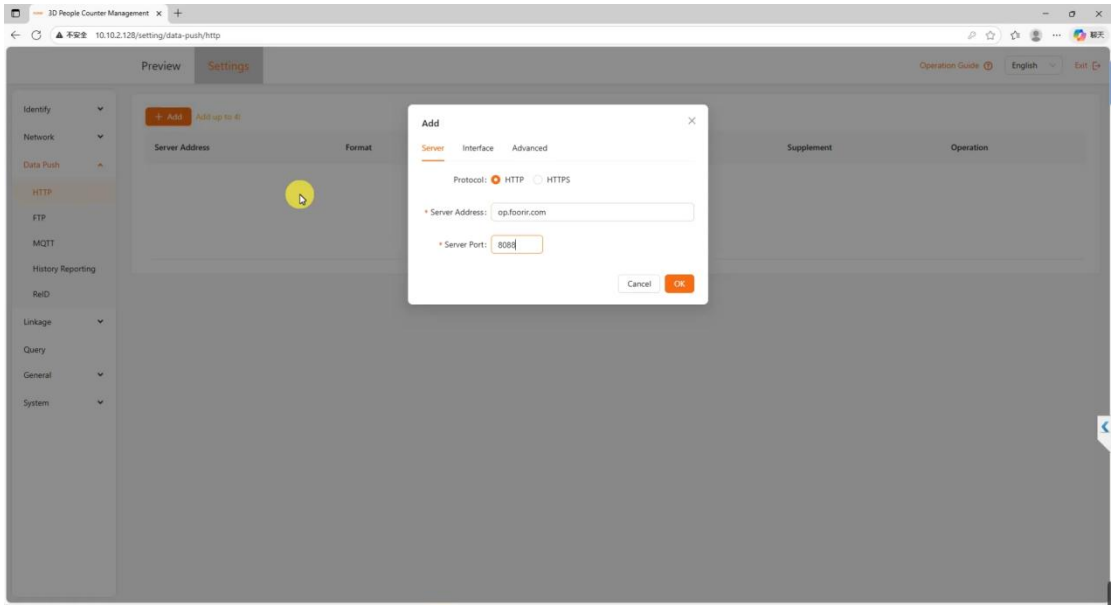

## 5.6 Equipment Upgrade (Optional)

Firmware upgrades are usually not required. When the supplier notifies you that an upgrade is needed, you can upload the firmware provided by the supplier here to upgrade the device. Before and after the upgrade, you need to confirm the device's version number to confirm whether the upgrade was successful.

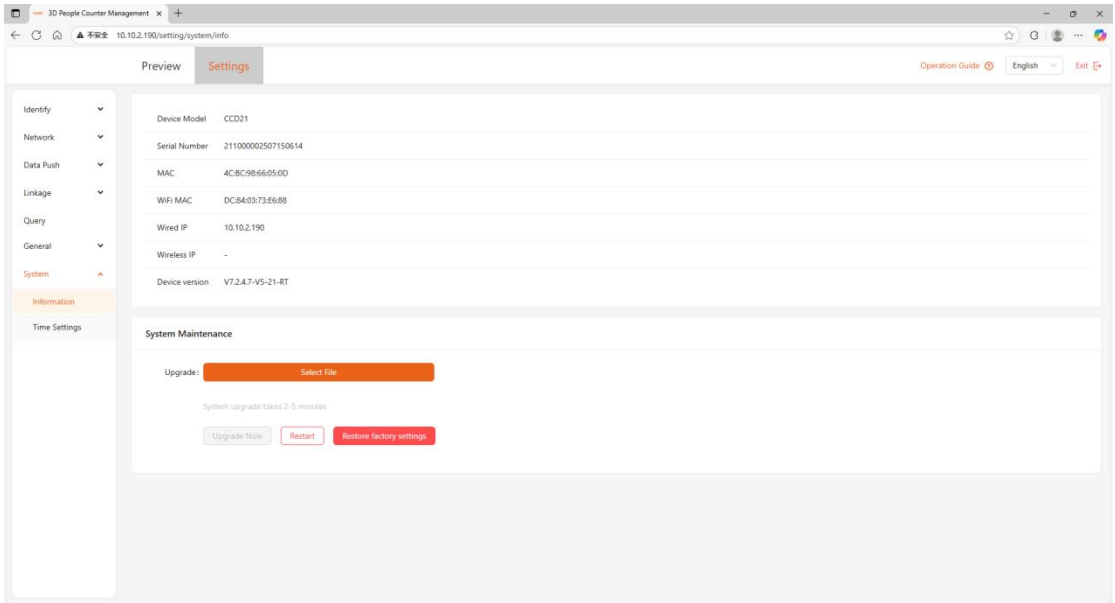


## 5.7 Map Collection (Optional)

If the count is inaccurate, you can click this button to automatically download the data collected that day and submit it to the manufacturer for algorithm optimization.

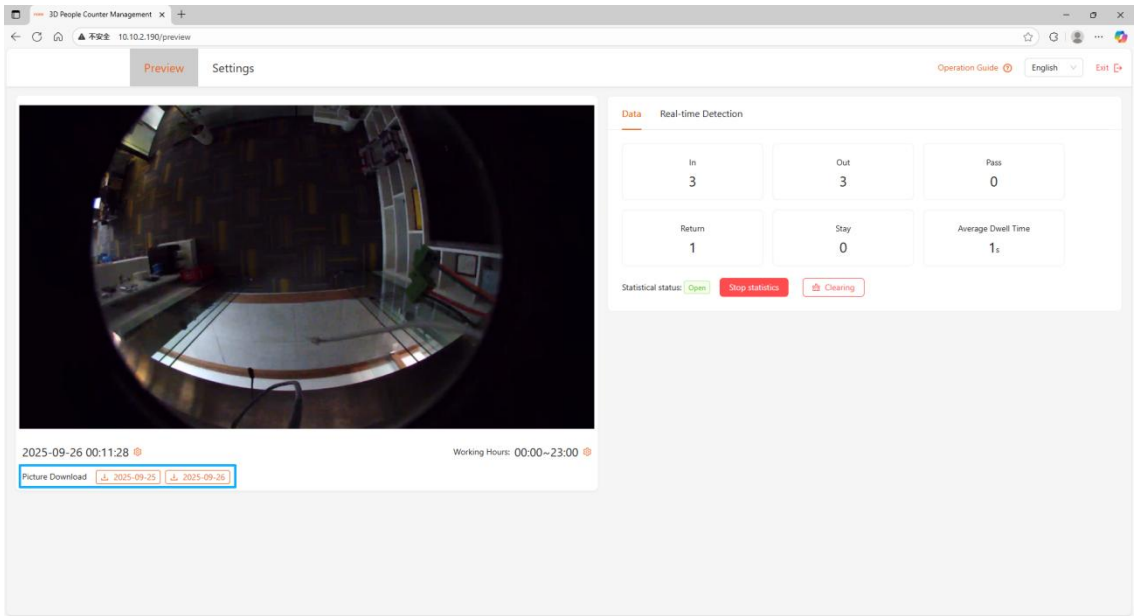

# 6. Common Faults and Handling Methods

## 6.1 Device cannot be found in wired mode

Solution 1: Connect the computer and the device to the same LAN or connect with a network cable, and change the IP address of the computer to DHCP.
Solution 2: Check the IP of the passenger flow device according to the network device such as the router, change the computer to the same network segment, and manually enter the IP connection.

## 6.2 Notes

1. The device automatically restarts at midnight every day by default. The local video display data is cleared after the restart, and the local storage data of the device is not cleared.
2. The heat dissipation of the device is on the back, if installed outdoors, it is recommended to add a baffle above the device to avoid direct sunlight
3. Try not to have obstructions within the field of view of the lens
4. Wired connections always take precedence over wireless connections, so after configuring wireless mode, you need to unplug the network cable.
5. WiFi only supports 2.4GHz, not support 5GHz.
6. Network latency affects the device's connection to the client
7. The installation height and angle must be filled in according to the actual one, if the height angle is not correct, it will lead to inaccurate counting.
8. When setting the height, there can be no people or objects under the camera other than the background.

## Statement

**Copyright © 2011- 2024 Chengdu Huaxin Zhiyun Technology Co., Ltd.**
**Copyright All Rights Reserved**

- Without the explicit written permission of Chengdu Huaxin Zhiyun Technology Co., Ltd., no organization or individual may reproduce, copy, transcribe or translate part or all of the contents of this manual without authorization, and may not disseminate it in any way (electronic, photocopying, recording, etc.) for profit-making purposes.
- FOORIR It is a registered trademark of Chengdu Huaxin Zhiyun Technology Co., Ltd. All trademarks mentioned in this manual are owned by their respective owners.
- The product specifications and information mentioned in this manual are for reference only. If there is any content update, no further notice will be given. Unless otherwise agreed, this manual is only used as a guide, and the statements made do not constitute any form of warranty.

## Notice

- The parameters used in the screenshots shown in this manual are only used as setting examples for reference and may not be completely consistent with the actual situation. Please set the parameters according to your actual needs.
- The housing is prohibited from being disassembled during operation. Anti-disassembly reminder: Be careful when manually disassembling the housing of the device to avoid damage to the device. This is a Class A product. In a living environment, this product may cause radio interference. In this case, the user may need to take practical measures to deal with the interference.
- Due to different software versions, the screenshots shown in this manual may not be completely consistent with the device interface of the product you purchased. Please configure your product according to the actual device interface.
- If you find that there is a shortage or damage to any accessories, please contact your local dealer in time. The product pictures/screenshots in this manual are for reference only and are intended to help users install and configure the product. Please refer to the actual product/actual interface for details.

**For assistance, please contact:**
Manufacturer: Chengdu Huaxin Zhiyun Technology Co., Ltd.
Phone/WhatsApp:+86 18981978865
E-mail:info@foorir.com
Website: www.foorir.com